DOWNLOAD MULTILINGUAL USER MANUAL

code.ironbaltic.com/u/rmbwravq

FRONT A-ARM GUARDS (ALUMINIUM)

YAMAHA

GRIZZLY 550 / 700

Code 02.713VP

Version 22102023



Keep this manual for future reference!

If you need any spare parts, please send this packaging data to your local dealer or to Iron Baltic sales@ironbaltic.com

Iron Baltic Ltd | +372 653 3711 | sales@ironbaltic.com | www.ironbaltic.com

SPECIFICATION

Pos.	Description	Code	Amount
1	Front right arm guard	02.713	1
2	Front left arm guard	02.714	1
3	Mounting bracket	02.4606	2
4	Conical washer	14.502	4
5	Bolt M6x25 DIN 7991	OT.02.04.040	4

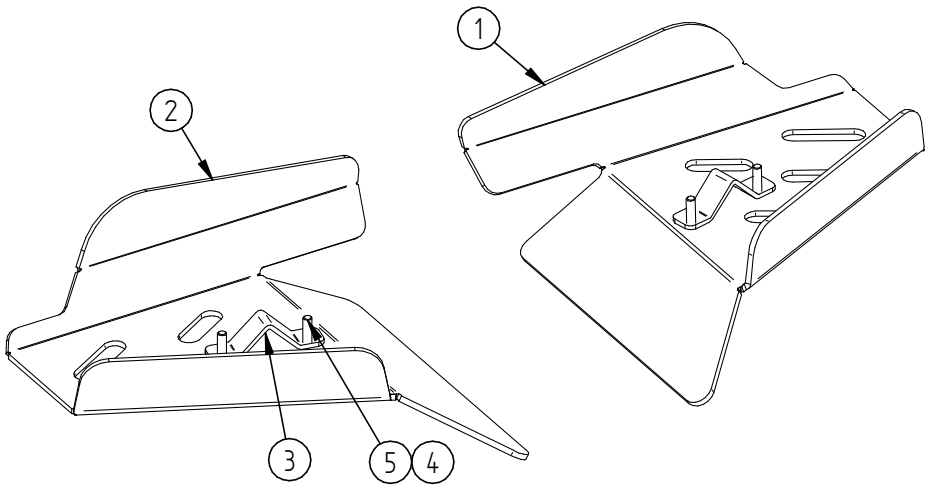

The numbers in the figure correspond to the Pos numbers in the specification table.

Thread size	Strength class		
	4.8	8.8 (default)	10.9
	Tightening torque (Nm)		
M6	5,5	10	15
M8	13	25	35
M10	25	50	75
M12	45	85	130
M16	115	215	315

TOOLS REQUIRED FOR INSTALLATION:

- Allen key H4

NB!

We recommend using thread lock fluid on the bolts!
Bolts tend to loosen with vibration from ATV.

NB!

All pictures in this manual are for illustration purposes only and may differ from real product due to the changes made to the product during improvements!

FITTING INSTRUCTIONS

Step 1 Install front A-arms protections, use brackets 02.4606 and bolts M6x25.

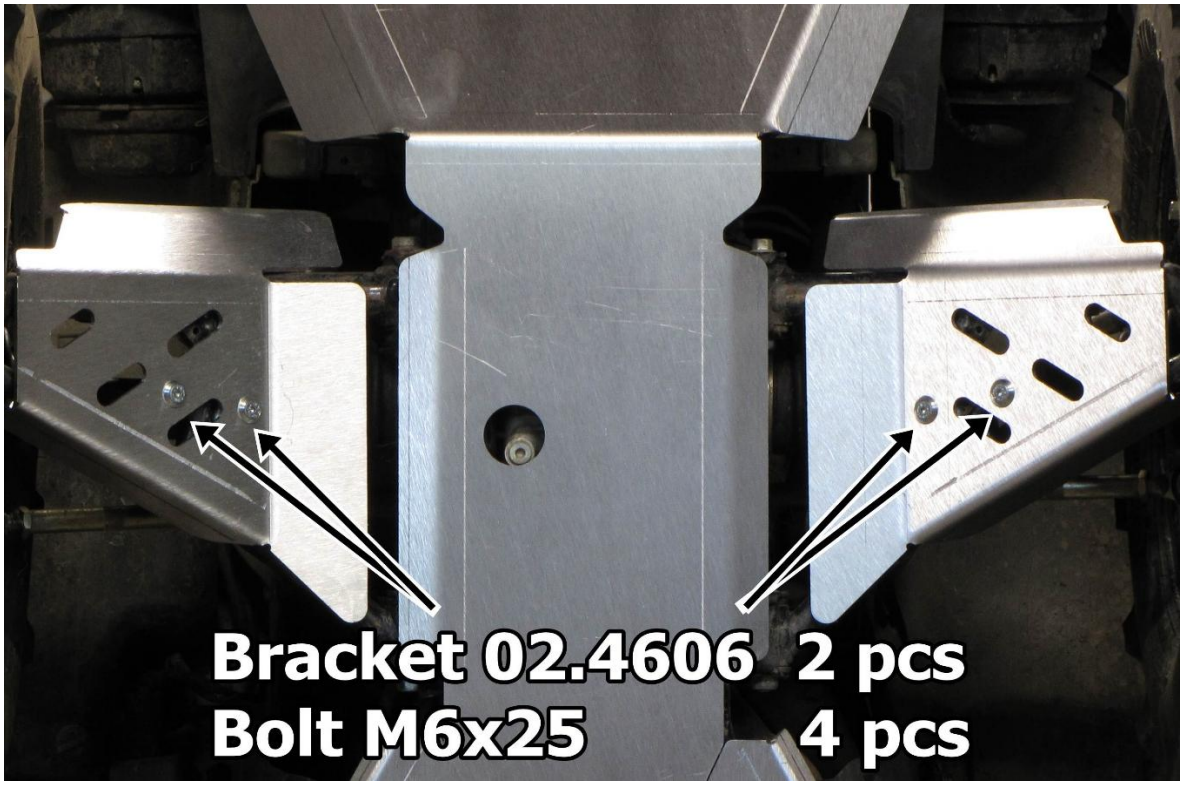



IRON BALTIC OÜ
Joa tee 17
Vääna 76903
Estonia / Europe

+372 6 533 711
sales@ironbaltic.com

www.ironbaltic.com
www.facebook.com/ironbaltic
www.youtube.com/user/ironbalticltd